VA LED FIXTURE WIDE BODY VAPOR TIGHT

Energy Solutions INTERNATIONAL, INC.

FOR USE IN AMBIENT AND GENERAL LIGHTING APPLICATIONS

PROJECT
TYPE
PART NUMBER

FEATURES

Suitable for Wet or Washdown Applications

Superior light quality and photometric efficiency

Constant current platform offers superior efficacy

100,000+ hour L70 life

Corrosion-resistant stainless steel latches are standard

0-10V Dimming standard

SPECIFICATIONS

CONSTRUCTION
5VA rated fiberglass composite housing

LENS
100% virgin impact resistant acrylic. Available in polycarbonate for high abuse environments or with a DR blend for maximum chemical resistance.

CONSTRUCTION
No tools are required for ballast access. Captive stainless steel latches secure the lens.

MOUNTING
Stainless hanging straps allow easy fixture installation without drilling through the enclosure.

ELECTRICAL
LED Light Engine designed for reliability and long life operation
Standard 0-10V dimming to 1%
120 - 277 V standard; 347V or 480V available

CONTROLS
Individual or grouping control with many solutions available
Consult factory for specific requirements

LISTINGS
DesignLights Consortium qualified, see DLC QPL
ETL safety certified
IP66 rated
NSF certified
NEMA 4X rated
Standard 5 year warranty / 10 year warranty available upon request

DIMENSIONAL INFORMATION

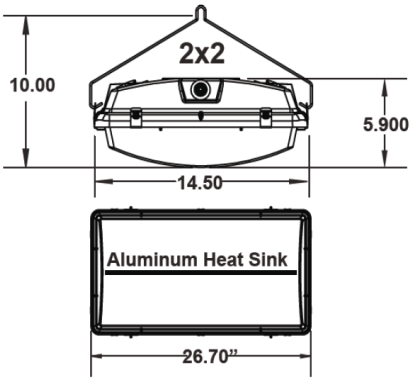

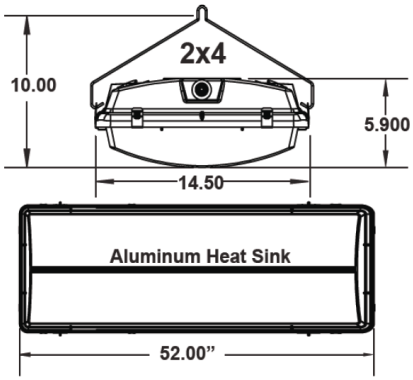

Buy American Act COMPLIANT

MADE IN MINNESOTA

USA DESIGNED • USA MANUFACTURED • USA ASSEMBLED

ENERGY SOLUTIONS INTERNATIONAL • WEST ST PAUL, MN • WWW.ESILIGHTING.COM • (651) 268 - 6060

DLC LISTED

VA LED FIXTURE WIDE BODY VAPOR TIGHT

Energy Solutions INTERNATIONAL, INC.

ORDERING INFORMATION

STYLE	SIZE	LIGHT ENGINE	COLOR TEMP	STANDARD	OPTIONS
				BX	

STYLE

F FIXTURE

K RETROFIT KIT

SIZE

22VA 2’ x 2’

24VA 2’ x 4’

LIGHT ENGINE

2’ X 2’	2’ X 4’
F2M0 41W 6239 LUMENS	**F41I0** 100W 15573 LUMENS
F2H5 55W 8550 LUMENS	**F41N0** 129W 19903 LUMENS
F2Y0 69W 10988 LUMENS	**F41H5** 155W 24217 LUMENS
F2Z5 85W 13372 LUMENS	**F41Z0** 180W 27846 LUMENS
F21I0 100W 15573 LUMENS	**F42I0** 200W 31145 LUMENS
F21X5 111W 17387 LUMENS	**F42N0** 229W 35900 LUMENS

Light engines represent FR lens option, contact factory for clear lens data

COLOR TEMP

35 3500K

40 4000K

50 5000K

STANDARD

BX INDIVIDUALLY BOXED

OPTIONS

D 0-10V DIMMING

FR FROSTED LENS

CL CLEAR LENS

OBS ON BOARD SENSOR

V V HANGERS

Y Y TOGGLE HANGERS

CUSTOM OPTIONS

ADDITIONAL GRAPHICS

Buy American Act COMPLIANT

MADE IN MINNESOTA

USA DESIGNED • USA MANUFACTURED • USA ASSEMBLED

ENERGY SOLUTIONS INTERNATIONAL • WEST ST PAUL, MN • WWW.ESILIGHTING.COM • (651) 268 - 6060

INTERTEK ETL LISTED US

DLC LISTED